DO NOT SCALE ALL ERRORS TO BE REPORTED TO DRAWING OFFICE

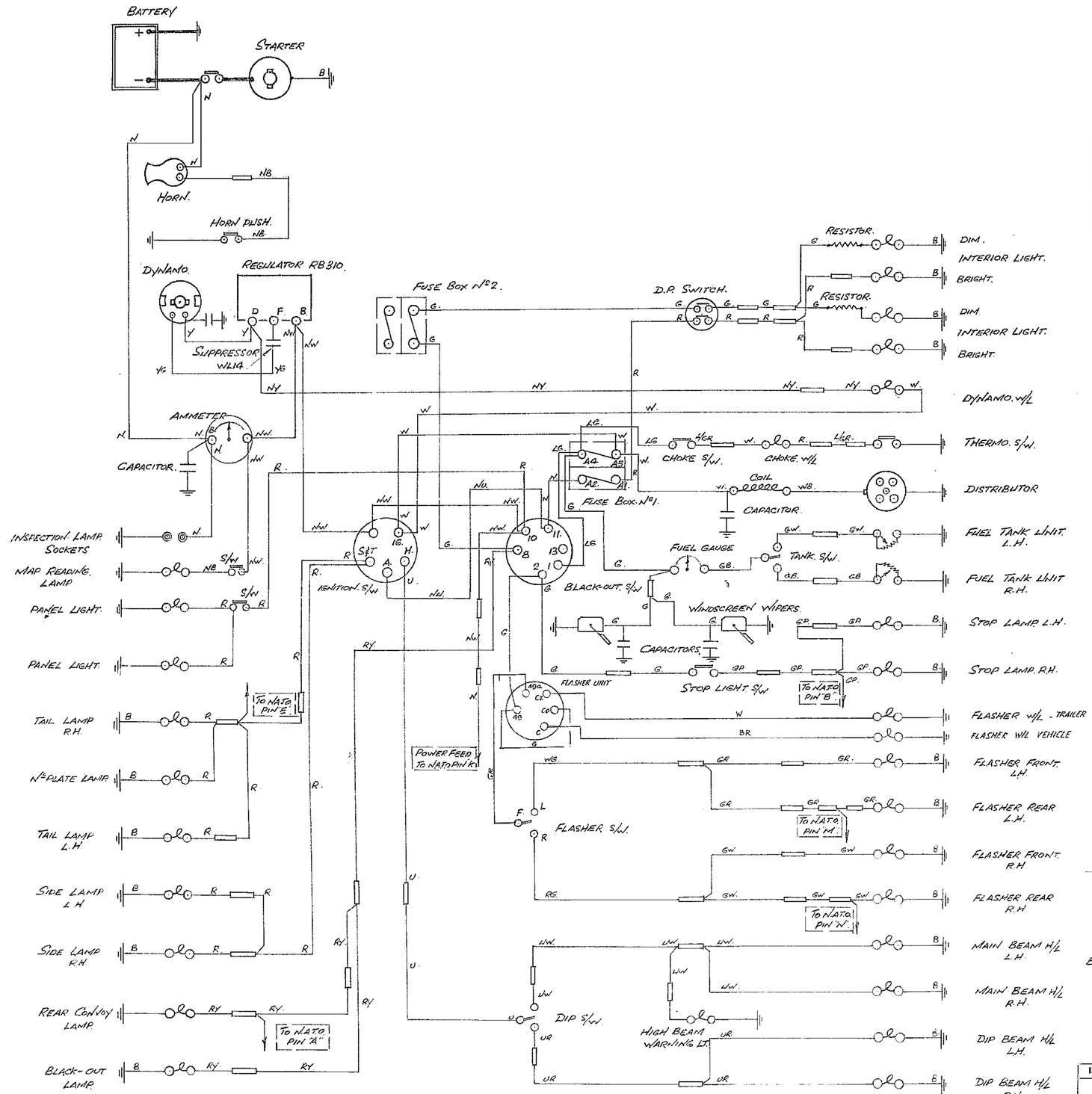

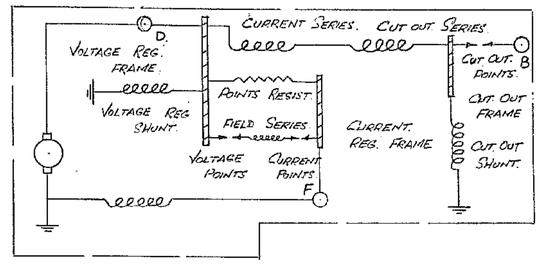

RB. 310. CIRCUIT

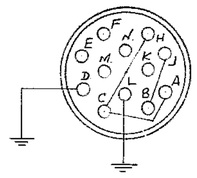

N.A.T.O. SOCKET

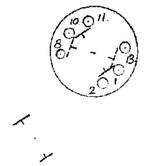

NORMAL. BLACK-OUT.

BLACK-OUT SWITCH.

KEY TO CABLE COLOURS.					
B	BLACK	W	WHITE	S	SLATE
U	BLUE	N	BROWN.	O	ORANGE.
R	RED	P	PURPLE	L	LIGHT.
G	GREEN	Y	YELLOW.		

KEY TO TERMINALS ETC.

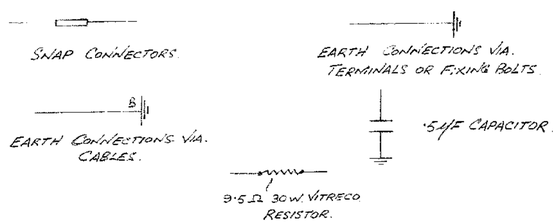

APPLICABLE TO ARMY (AUST.) SPEC. 52

PRE-ROVER MOD. L8285 CN3168

ISSUE A	PRESSED METAL CORP. LTD. COSGROVE ROAD, ENFIELD - - - PHONE: YB 0281	DRAWN	CH'K'D	APPR'D
		DATE	DATE	DATE
	MAT'L & FINISH	SCALE	NEXT ASSY	
5/4 2809 APPR'D DATE	DESCRIPTION ELECTRICAL WIRING DIAGRAM ARMY 109" WB. LANDROVER TRUCK PANEL 12V. SYSTEM	DRAWING No. 0113124		SIZE A1